article#	**9350014-p**
article description	**Cable reel XREEL 310 3xSSD IP68 nat 30m 3G2,5 H07BQ-F orange K2 IP54**
description long	Cable Reel XREEL310 Reel (black) with central, internal locking mechanism Protected connecting area Solid carrying rack (black) with ergonomic handle Central Plate with 3 pcs watertight sockets national version (20351-9b) Rated operating voltage: 250V Rated current: 16A Protection rating: IP68 1 pcs thermal circuit breaker 30m Orange cable H07BQ-F 3G2.5mm2 Nautilus plug watertight IP68 blue (20051-b) Cable reel installed ready for use complies with RoHS directive 2011/65/EU low voltage directive NSpRl 2014/35/EU UV stability according ISO 4892-2 acc standard IEC/EN 61242 Protection rating complete system: IP54 For outdoor usage Conform with BGI608 K2
GTIN (EAN)	9003399332302
country of origin	PL
customs number	85444290
net weight	6.45 kg
packaging quantitiy	1
minimum order quantitiy	1

ETIM 9.0	EC000191
Material housing	Plastic
Cable assembly	H07BQ-F
Core cross section	2.5 mm²
Number of cores	3
Number of socket outlets with protective contact CEE 7/3 (type F)	3
Type of mains connection	Plug CEE 7/4 (type F)
Cable length	30 m
With mounting frame	True
With thermal overload protection	True
With locking	True
Degree of protection (IP)	IP54
Colour	Black

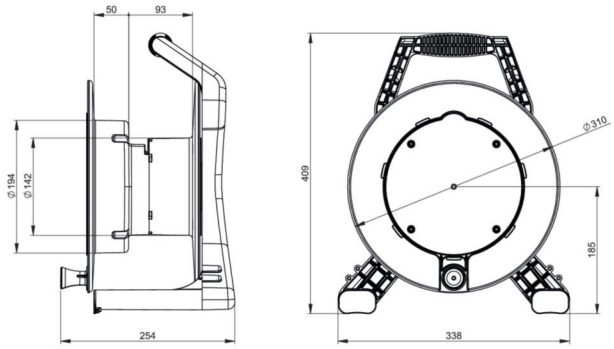

https://www.pcelectric.at/shop/en/?func=detail&artnr=9350014-p

Changes and printing errors reserved!

8/21/2024