Connection to the future

article#	**9849250**
article description	**Distribution box rubber hanging version Eisenstadt HV 2x16/5 2xSSD M20**
description long	Vollgummiverteiler Modell EISENSTADT IP54 145x145x105mm mit Griffhaken und Aufhängeösen 1xM20 Verschraubung oben (Kabeldurchm. 10-14mm PG16) schwarz 2xCEE-Steckdose 16A 5p 400V abgesichert d. Vorsicherung Zuleitung 2xSK-Steckdose 16A 250V IP54 abgesichert d. Vorsicherung Zuleitung Verteiler auf Vario-Connector 5polig 10qmm verdrahtet
GTIN (EAN)	9003399678110
country of origin	AT
customs number	85371098
net weight	4.100 kg
packaging quantitiy	1
minimum order quantitiy	1

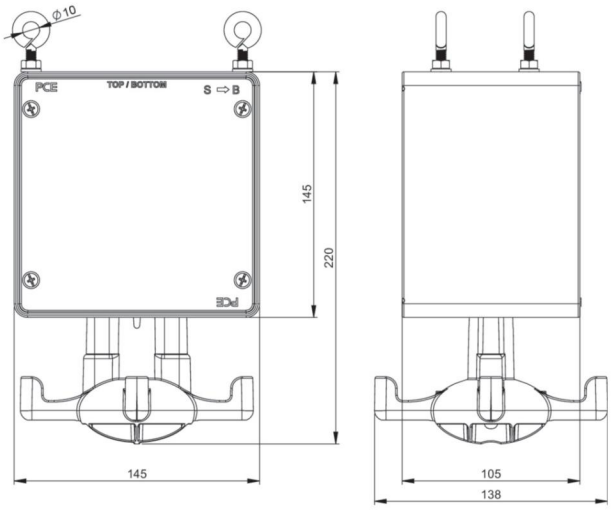

ETIM 9.0	EC000379
CEE socket outlet 16 A	2x16A5p400V
Number of socket outlets with protective contact CEE 7/3 (type F)	2
Protection	None
Material housing	Rubber
Contact material	CuZn
Surface treatment contacts	Nickel-plated
Power supply/connection possibility	1 cable (branch line)
Number of poles mains connection	5
Diameter cable entry	M20
Handling	Hangable
Degree of protection (IP)	IP54
Colour	Black
Height	145 mm
Width	145 mm
Depth	105 mm

https://www.pcelectric.at/shop/en/?func=detail&artnr=9849250

Changes and printing errors reserved!

11/6/2025