CONTENTS

1.	Manufacturer	1
2.	General safety information's	1
3.	Purpose	2
4.	Degree of protection	2
5.	Technical data	2
6.	Limitation of usage	4
7.	Model code	5
8.	Dimensions of control units	7
9.	Actuator/indicator components	8
10.	Build-in components	9
11.	Inspection, maintenance, repair, overhaul	11
12.	Mounting	11
13.	Spare parts (according component specification)	11
14.	Marking	12

1. MANUFACTURER

TEP Ex d.o.o. , Medarska 69, HR-10090 Zagreb
T 00385 49 222900, F 00385 49 426450
e-mail: tepex@tepex.hr, www.tepex.hr

2. GENERAL SAFETY INFORMATIONS

⚠ WARNING!

The user manual contains basic information about the product. Mounting, installation, usage and maintenance should be carried out under this user manual to provide and ensure safe operation within the nominal characteristics. This user manual complement national Regulation and Standards. The responsible person shall ensure their implementation. Failure off implement this user manual can reduce explosion protection and endanger people, property and the environment. Any improper and illegal actions as well as non-compliance with the provisions of this user manual excludes all responsibility by manufacturer side.

Before installation/commissioning:
- Carefully read all instructions,
- Execute proper training of responsible personnel,
- Check that the contents of these instructions is fully understandable by the responsible personnel,
- Make sure that all the requirements and national Regulations as well as all special security measures are applied.

In lack of understanding:
- Contact the manufacturer.

During operation:
- Ensure that this user manual and other work instructions are available to the responsible staff at all times,
- Check the implementation of these instructions and all other safety user's instructions.

3. PURPOSE

Explosion protected control units type SKX 12 - SKX 15 are intended for use in control, distribution and signaling circuits in areas where an explosive gas and/or dust atmosphere may be present, respectively in hazardous areas 1, 2, 21, 22 in accordance with the standards EN 60079-10-1 and EN 60079-10-2

4. DEGREE OF PROTECTION

Explosion protection is in accordance with the "General requirements" in the types of protection "Flameproof enclosure", "Increased safety", "Intrinsic safety", "Encapsulation" and “Protection by enclosure” in accordance with standards:

- EN IEC 60079-0:2018,
- EN 60079-1:2014,
- EN IEC 60079-7:2015/A1:2018,
- EN 60079-11:2012,
- EN 60079-18:2015/A1:2017,
- EN 60079-31:2014.

Design and construction of products are in accordance with apparatus standards EN 60947-1, EN 60947-5-1, EN 60947-5, EN 60204 and all other related standards.
Control units are in conformity with EU Directives: ATEX Directive 2014/34/EU, LV Directive 2014/35/ EU, EMC Directive 2014/30 EU, RoHS Directive 2011/65/EU.
Control units are designed, produced and tested in conformity with the Quality management systems in accordance with EN ISO 9001 and EN ISO/IEC 80079-34.

5. TECHNICAL DATA

Certificate:	FIDI 19 ATEX 0051X
Marking:	CE 0722
Category and explosion protection:	Ex II 2G Ex db eb ia/ib mb IIC T6 Gb I M2 Ex db eb ia/ib mb I Mb II 2D Ex tb IIIC T80°C Db
Ambient temperature:	-20ºC ≤ T_a ≤ +40ºC/+50 ºC /+55 ºC – depending on the current I_{the}
Mechanical protection:	IP 66 category 1 for II 2GD IP 64 category 1 for I M2
Impact resistance:	IK 08
Class of protection:	I (PE – protective earthing)
Rated insulation voltage U_i :	- 630 V AC (type with mantle terminals type SL U_i = 400V AC)
Rated operational voltage U_e :	- depends on the built-in components
Conventional enclosed component thermal current I_{the} :	- 16 A max. for ambient temperature -20°C ÷ +40°C - 10 A max. for ambient temperature -20°C ÷ +50°C - 7 A max. for ambient temperature -20°C ÷ +55°C
PE terminals (inside of the enclosure):	- 2x6 mm^2 max. solid, stranded, flexible, - tightening torque 2,5 Nm
Tightening torque for build-in component terminals:	- 0,8 Nm
PE/N bus bar, SKX 15 only:	- max. 11 x (2x2,5 mm^2) solid, stranded, flexible; Tightening torque 0,8 Nm
Cover fixing:	- four cheese head screw M5x25/10-Z4 A2 ISO 7045 with plate 4,5 A2 DIN 6905, - tightening torque 2,0 Nm
Cable gland SPU 25:	- ATEX certificate cable gland ISO 25 II 2G Ex eb IIC Gb II 2D Ex tb IIIC Db for cables $Ø_v$ 7-15 mm,
Cable gland for I M2:	- ATEX certificate cable ISO 20 – ISO 36 (PG 13,5 – Pg 29) I M2 Ex e I Mb for cables $Ø_v$ 7-28 mm

Cables for I M2:	- NSSHÖU (EpN 50) - max. 1x25mm^2, max. 2x25mm^2 - NSSHÖU…+…/3E (EpN 53) - max. 3x16/10mm^2 - NSSHÖU…KON (EpN 55) - max. 3x16/10mm^2, max. 4x6/6mm^2, max. 5x6/6mm^2 - EpN 58 – 5x6mm^2
Tightening torque for cable gland SPU 25 pressing screw:	- 2,5 Nm
Tightening torque for plug SPC 25:	- 4,0 Nm
Enclosure:	- SMC black, RAL 9005 - resistance to impact 7 J - surface resistance < 10^9 Ω
Dimension (without cable glands):	SKX 12 : 100 x 100 x 80 mm SKX 13 : 150 x 100 x 80 mm SKX 14 : 200 x 100 x 80 mm SKX 15 : 200 x 150 x 80 mm SKX 15H: 200 x 150 x 135 mm
Mounting:	SKX 12: 75 x 50 mm SKX 13: 75 x 100 mm SKX 14: 75 x 150 mm SKX 15/15H: 125 x 150 mm
Output safety voltage U_0 for intrinsic safety circuits SKX 12/63M and SKX 15/68M:	- max. 60V
Output safety current I_0 for intrinsic safety circuits SKX 12/63M and SKX 15/68M:	- max. 1A

Rated operational current I_{th} for SKX 15/67M (table off max. allowed installation):

Nominal cross-section [mm^2]	Max. terminals	Ambient temperature T_a [°C]	I_{th} [A]
2,5 / 2,5	2	40	18
2,5 / 2,5	4		16
2,5 / 2,5	24		13
2,5 / 2,5	28		12
2,5 / 2,5	2	50	16
2,5 / 2,5	4		14
2,5 / 2,5	24		11
2,5 / 2,5	28		10
2,5 / 2,5	2	55	15
2,5 / 2,5	4		13
2,5 / 2,5	24		10
2,5 / 2,5	28		9
4 / 4	4	40	21
4 / 4	8		18
4 / 4	24		16
4 / 4	4	50	18
4 / 4	8		16
4 / 4	24		14
4 / 4	4	55	17
4 / 4	8		15
4 / 4	24		12

6 / 6	2	40	36
6 / 6	4		32
6 / 6	8		22
6 / 6	16		20
6 / 6	2	50	30
6 / 6	4		26
6 / 6	8		19
6 / 6	16		17
6 / 6	2	55	26
6 / 6	4		23
6 / 6	8		16
6 / 6	16		14
10 / 10	2	40	50
10 / 10	4		45
10 / 10	8		37
10 / 10	12		33
10 / 10	2	50	42
10 / 10	4		37
10 / 10	8		30
10 / 10	12		26
10 / 10	2	55	38
10 / 10	4		34
10 / 10	8		27
10 / 10	12		23
16 / 16	2	40	66
16 / 16	4		58
16 / 16	8		55
16 / 16	12		50
16 / 16	2	50	58
16 / 16	4		50
16 / 16	8		45
16 / 16	12		40
16 / 16	2	55	52
16 / 16	4		45
16 / 16	8		40
16 / 16	12		35
25 / 25	2	40	80
25 / 25	4		70
25 / 25	8		60
25 / 25	2	50	70
25 / 25	4		60
25 / 25	8		50
25 / 25	2	55	60
25 / 25	4		50
25 / 25	8		40

6. LIMITATION OF USAGE

Housings MMK 12-15 for M1 and M2 must be protected from impact as they are tested for lower impact energy according to EN 60079-0.
Requirements for clearance and creeping distance are according to EN 60079-7, sections 4.3 and 4.4 must be met.
Accessories used for cable glands and unused entries must have mechanical protection IP66 and be certificate according to EN 60079-0, EN 60079-7 and EN 60079-31.
When defining rated operational current for a given cable cross-section, the maximum permissible current of the clamp and the connecting cable or conductor should be considered.

7. MODEL CODE

The program features a serial control combination and a control combination at customer's request.

Serial products for II 2GD

Type of control unit	Build-in components – Actuators and indicators – Cable glands
SKX 12/1	SLP - SPO 02/1 - II 2G/D Ex eb/tb ISO 25
SKX 12/2	SLP - SPO 02/2 - II 2G/D Ex eb/tb ISO 25
SKX 12/3	SLP - SPO 02/4 - II 2G/D Ex eb/tb ISO 25
SKX 12/21	SMS 03/1 - SMO 17/1 - II 2G/D Ex eb/tb ISO 25
SKX 12/22	SMS 03/8 - SMO 17/5 - II 2G/D Ex eb/tb ISO 25
SKX 12/23	SMS 03/6 - SMO 17/2 - II 2G/D Ex eb/tb ISO 25
SKX 12/31	PBT 01 - 4000-Y0 - II 2G/D Ex eb/tb ISO 25
SKX 12/31-1	PBT 01 - 4000-Y0 with accidental contact protection - II 2G/D Ex eb/tb ISO 25
SKX 12/32	PBT 01 - SPO 01/1 - II 2G/D Ex eb/tb ISO 25
SKX 12/33	PBT 01 - SPO 01/2 - II 2G/D Ex eb/tb ISO 25
SKX 12/34	PBT 01 - 4000-P3 - II 2G/D Ex eb/tb ISO 25
SKX 12/34-1	PBT 01 - 4000-P3 with accidental contact protection - II 2G/D Ex eb/tb ISO 25
SKX 12/34-2	PBT 01 - 4000-P3 with metal accidental contact protection - II 2G/D Ex eb/tb ISO 25
SKX 12/35	PBT 01 - 4000-Y0 with protector - 2 x II 2G/D Ex eb/tb ISO 20
SKX 12/36	PBT 01 - 4000-Y0 - 2 x II 2G/D Ex eb/tb ISO 20
SKX 12/36-1	PBT 01 - 4000-Y0 with accidental contact protection - 2 x II 2G/D Ex eb/tb ISO 20
SKX 12/37	0203-A - 4000-DW - II 2G/D Ex eb/tb ISO 25
SKX 12/38	PBT 01 - 4000-Y1 - 2 x II 2G/D Ex eb/tb ISO 20
SKX 12/40	0201 - 4000-P2 - II 2G/D Ex eb/tb ISO 25
SKX 12/41	0201 - 4000-S - II 2G/D Ex eb/tb ISO 25
SKX 12/42	0201 - 4000-K - II 2G/D Ex eb/tb ISO 25
SKX 13/1	2xPBT 01 - SPO 01/1 - SPO 01/2 - II 2G/D Ex eb/tb ISO 25
SKX 13/11	PBT 01 - SPO 01/1 - SLP - SPO 02/2 - II 2G/D Ex eb/tb ISO 25
SKX 13/21	SL8 – 6 x II 2G/D Ex eb/tb ISO 25
SKX 13/71	GHG 238 ...R.... (Ex 23 4 024) - SMO 17/2 - II 2G/D Ex eb/tb ISO 25
SKX 13/72	GHG 238 ...R.... (Ex 23 8 067) - SMO 17/1 - II 2G/D Ex eb/tb ISO 25
SKX 13/10	SMS 03/1 - SMO 17/1 - II 2G/D Ex eb/tb ISO 25
SKX 13/20	SMS 03/4 - SMO 17/2 - II 2G/D Ex eb/tb ISO 25
SKX 13/30	SMS 03/5 - SMO 17/2 - II 2G/D Ex eb/tb ISO 25
SKX 13/40	SMS 03/6 - SMO 17/2 - II 2G/D Ex eb/tb ISO 25
SKX 13/60	SMS 03/3 - SMO 17/3 - II 2G/D Ex eb/tb ISO 25
SKX 13/70	SMS 03/2 - SMO 17/1 - II 2G/D Ex eb/tb ISO 25
SKX 13/80	SMS 03/7 - SMO 17/1 - 2x II 2G/D Ex eb/tb ISO 25
SKX 13/100	SMS 03/8 - SMO 17/5 - II 2G/D Ex eb/tb ISO 25
SKX 13/110	SMS 03/9 - SMO 17/1 - 2x II 2G/D Ex eb/tb ISO 25
SKX 13/120	SMS 03/11 - SMO 17/2 - 2x II 2G/D Ex eb/tb ISO 25
SKX 14/1	2xPBT 01 - SPO 01/1 - SPO 01/2 - SLP - SPO 02/2 - II 2G/D Ex eb/tb ISO 25
SKX 14/11	3xPBT 01 - SPO 01/1 - SPO 01/2 - SPO 01/3 - II 2G/D Ex eb/tb ISO 25
SKX 14/21	SL 8 - 8 x II 2G/D Ex eb/tb ISO 25
SKX 14/22	3xSLP - SPO 02/1 - SPO 02/2 - SPO 02/3 - II 2G/D Ex eb/tb ISO 25
SKX 14/31	3xPBT 01 - SPO 01/1 - SPO 01/2 - 4000-Y0 - II 2G/D Ex eb/tb ISO 25
SKX15/1	2xPBT 01 - SPO 01/1 - SPO 01/2 - 2xSLP - SPO 02/1 - SPO 02/2 -2xII 2G/D Ex eb/tb ISO 25
SKX15/11-11	2xPBT 01 - SPO 01/1 - SPO 01/2 - AM 72 100/1 A (ammeter scale is created according to customer's request) - 2x II 2G/D Ex eb/tb ISO 25
SKX15/21-11	SMS03/2 ...R.... (Ex 23 8 067) - SMO 17/1 - AM 72 100/1 A (ammeter scale is created according to customer's request) - 2x II 2G/D Ex eb/tb ISO 25
SKX15/34	4xPBT 01 - 2xSPO 01/1 - 2xSPO 01/2 - 2xII 2G/D Ex eb/tb ISO 25
SKX15/41	SMS 03/1 - 2xCTS16U - 2xII 2G/D Ex eb/tb ISO 25
SKX15H/50	SMS 03/12 - SMO 17/2 - II 2G/D Ex eb/tb ISO 25
SKX15H/90	SMS 03/10 - SMO 17/3 - II 2G/D Ex eb/tb ISO 25
SKX15/51	SMS 03/11 - SMO 17/3 - 2xPBT 01 - SPO 01/1 – SPO 01/2 - 2xII 2G/D Ex eb/tb ISO 25
SKX15/61	GHG 238 ...R.... (Ex 23 4 024) - SMO 17/2 - 5xCTS4UN - II 2G/D Ex eb/tb ISO 25
SKX15/62	GHG 238 ...R.... (Ex 23 8 067) - SMO 17/1 - 5xCTS4UN - II 2G/D Ex eb/tb ISO 25
SKX15/65	4xSL5 - 8xII 2G/D Ex eb/tb ISO 25
SKX15/70	SMS 03/09 - SMO 17/1 -2x II 2G/D Ex eb/tb ISO 25 + 1x II 2G/D Ex eb/tb ISO 16 + 1x II 2G/D Ex eb/tb ISO 16 plug (as a spare part)

Serial products for I M2:

Type of control unit	Build-in components – Actuators and indicators – Cable glands
SKX 12/1M	SLP - SPO 02/1 - I M2 Ex eb Pg 21
SKX 12/2M	SLP - SPO 02/2 - I M2 Ex eb Pg 21
SKX 12/3M	SLP - SPO 02/4 - I M2 Ex eb Pg 21
SKX 12/32M	PBT 01 - SPO 01/1 - I M2 Ex eb Pg 21
SKX 12/33M	PBT 01 - SPO 01/2 - I M2 Ex eb Pg 21
SKX 12/34M	PBT 01 - GHG 410 1905 R0005 - I M2 Ex eb Pg 21
SKX 12/62M	5 x CTS4UN na nosaču TH 35-7,5 - I M2 Ex eb Pg 21
SKX 12/63M	5 x CTS4UNBU na nosaču TH 35 - 7,5 - I M2 Ex eb Pg 21 plava
SKX 13/1M	2xPBT 01 - SPO 01/1 - SPO 01/2 - I M2 Ex eb Pg 21
SKX 13/11M	PBT 01 - SPO 01/1 - SLP - SPO 02/2 - I M2 Ex eb Pg 21
SKX 13/21M	SL8 – 4 x I M2 Ex eb Pg 21
SKX 13/10M	SMS 03/1 - SMO 17/1 - I M2 Ex eb Pg 21
SKX 13/20M	SMS 03/4 - SMO 17/2 - I M2 Ex eb Pg 21
SKX 13/30M	SMS 03/5 - SMO 17/2 - I M2 Ex eb Pg 21
SKX 13/40M	SMS 03/6 - SMO 17/2 - I M2 Ex eb Pg 21
SKX 13/60M	SMS 03/3 - SMO 17/3 - I M2 Ex eb Pg 21
SKX 13/70M	SMS 03/2 - SMO 17/1 - I M2 Ex eb Pg 21
SKX 13/80M	SMS 03/7 - SMO 17/1 - I M2 Ex eb Pg 21
SKX 13/100M	SMS 03/8 - SMO 17/5 - I M2 Ex eb Pg 21
SKX 13/110M	SMS 03/9 - SMO 17/1 - I M2 Ex eb Pg 21
SKX 13/120M	SMS 03/11 - SMO 17/2 - I M2 Ex eb Pg 21
SKX 14/1M	2xPBT 01 - SPO 01/1 - SPO 01/2 - SLP - SPO 02/2 - I M2 Ex eb Pg 21
SKX 14/11M	3xPBT 01 - SPO 01/1 - SPO 01/2 - SPO 01/3 - I M2 Ex eb Pg 21
SKX 14/22M	3xSLP - SPO 02/1 - SPO 02/2 - SPO 02/3 - I M2 Ex eb Pg 21
SKX15/1M	2xPBT 01- SPO 01/1 - SPO 01/2 - 2xSLP - SPO 02/1 - SPO 02/2 - I M2 Ex eb Pg 21
SKX15/11-11M	2xPBT 01 - SPO 01/1 - SPO 01/2 - AM 72 100/1 A (ammeter scale is created according to customer's request) - I M2 Ex eb Pg 21
SKX15/21-11M	SMS 03/2 ...R.... (Ex 23 8 067) - SMO 17/1 - AM 72 100/1 A(ammeter scale is created according to customer's request) - I M2 Ex eb Pg 21
SKX15/34M	4xPBT 01 - 2xSPO 01/1 - 2xSPO 01/2 - I M2 Ex eb Pg 21
SKX15/41M	SMS 03/1 - 2xCTS16U - I M2 Ex eb Pg 21
SKX15H/50M	SMS 03/12 - SMO 17/2 - I M2 Ex eb Pg 21
SKX15H/90M	SMS 03/10 - SMO 17/3 - I M2 Ex eb Pg 21
SKX15/51M	SMS 03/11 - SMO 17/3 - 2xPBT 01 - SPO 01/1 – SPO 01/2 - I M2 Ex eb Pg 21
SKX15/61M	GHG 238 ...R.... (Ex 23 4 024) - SMO 17/2 - 5xCTS4UN -I M2 Ex eb Pg 21
SKX15/62M	GHG 238 ...R.... (Ex 23 8 067) - SMO 17/1 - 5xCTS4UN - I M2 Ex eb Pg 21
SKX15/65M	4xSL5 – 4 x I M2 Ex eb Pg 29
SKX15/67M	CTS2,5UN, CTS4UN, CTS6UN, CTS10UN, CTS16UN, CTS25UN na nosaču TH 35-7,5 – 4 x I M2 Ex eb Pg 29 (table off max. allowed installation)
SKX15/68M	CTS2,5UNBU, CTS4UNBU, CTS6UNBU, CTS10UNBU, CTS16UNBU, CTS25UNBU on rail TH 35-7,5 – 4 x I M2 Ex eb Pg 29 blue (table off max. allowed installation)

Products for I M2 can also be supplied without cable glands (only with pre opened entries).

Control unit according to customer's request is marked with standard model code - SKX 12, SKX13, SKX 14, SKX 15 and MSRU number. MSRU number represents the factory serial number.
For example SKX 15/MSRU 1234.12
Control unit, as a single unit formed of more enclosures, are marked with standard model code of each used enclosure - SKX 12, SKX13, SKX 14, SKX 15 and MSRU number. MSRU number represents the factory serial number.
For example SKX 14-15/MSRU 1235.13
- In case of repetition of the housing of the same type, e.g. five SKX 14 housings, the marking is as follows:
5 x SKX 14 / MSRU 1234.
- In case of repetition of the housing of the same type, e.g. one housing SKX 13 and two housings SKX 14, the marking is as follows:
SKX 13/2 x SKX 14 / MSRU 1234.

8. DIMENSIONS OF CONTROL UNITS

Enclosures (without cable glands):

SKX 12/ . .

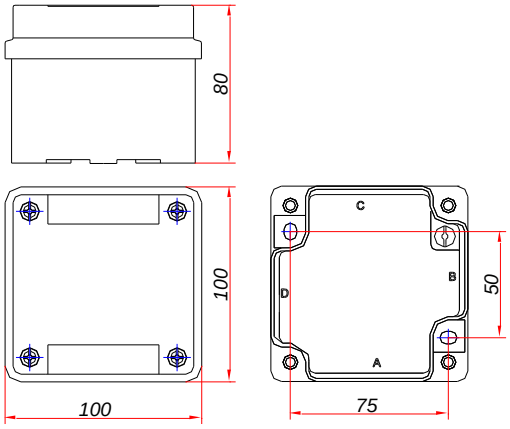

SKX 13/ . .

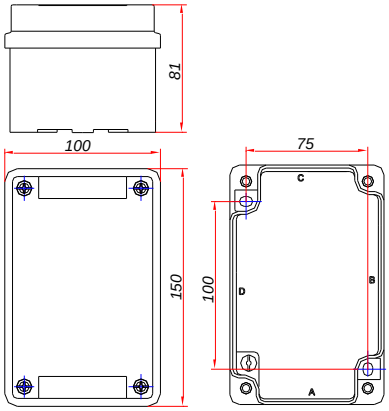

SKX 14/ . .

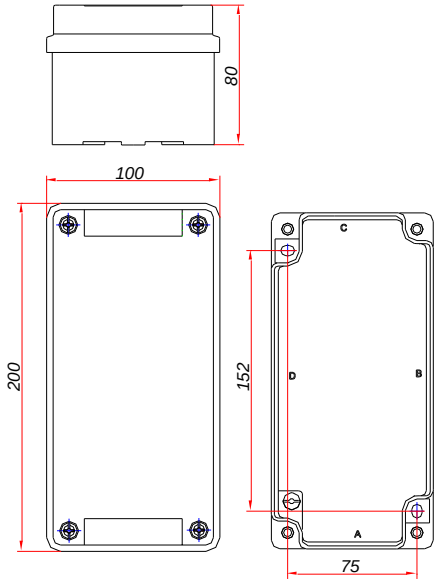

SKX 15/ . . , SKX 15 H/ . .

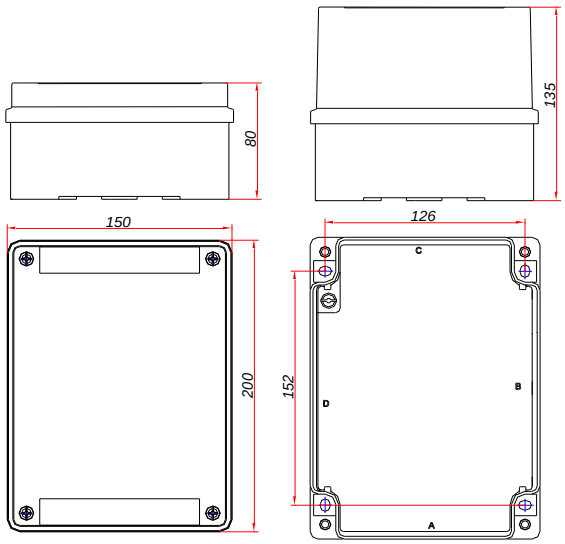

9. ACTUATOR/INDICATOR COMPONENTS:

Description, type, display

SWITCH ACTUATOR SMO 17/.

Explosion protection:
I M2 Ex eb I Mb
II 2G Ex eb IIC Gb
II 2D Ex tb IIIC Db

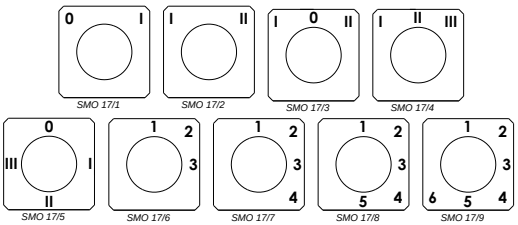

Description, type, display

PUSH BUTTON ACTUATOR SPO 01/.

Explosion protection:

I M2 Ex eb I Mb
II 2G Ex eb IIC Gb
II 2D Ex tb IIIC Db

Tip SPO 01/.	
SPO 01/01	**0**
SPO 01/02	**I**
SPO 01/03	**II**
SPO 01/04	**RED**
SPO 01/05	**GREEN**
SPO 01/06	**WHITE**
SPO 01/07	**START**
SPO 01/08	**STOP**
SPO 01/09	**ON**
SPO 01/10	**OFF**

MEASURING INSTRUMENT **SAM 72**

Explosion protection:
II 2G Ex eb IIC Gb II 2D Ex tb IIIC Db
I M2 Ex eb I Mb

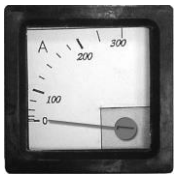

PUSH BUTTON ACTUATOR WITH TWO AXELS 4000-P2

Explosion protection:
II 2G Ex eb IIC Gb
II 2D Ex tb IIIC Db

FRONT ELEMENT OF SIGNAL LAMP SPO 02/.

Explosion protection:
I M2 Ex eb I Mb
II 2G Ex eb IIC Gb
II 2D Ex tb IIIC Db

Tip SPO 02/.	
SPO 02/01	**RED**
SPO 02/02	**GREEN**
SPO 02/03	**YELLOW**
SPO 02/04	**TRANSPARENT**

POTENTIOMETER ACTUATOR 4000-DW
Explosion protection:
II 2G Ex eb IIC Gb
II 2D Ex tb IIIC Db

MUSHROOM-HEAD PUSHBUTTON ACTUATOR (EMERGENCY-STOP) 4000-P3
Explosion protection:
II 2G Ex eb IIC Gb
II 2D Ex tb IIIC Db

KEY-OPERATED PUSHBUTTON ACTUATOR 4000-Y1
Explosion protection:
II 2G Ex eb IIC Gb
II 2D Ex tb IIIC Db

KEY-OPERATED MUSHROOM-HEAD PUSHBUTTON ACTUATOR (EMERGENCY-STOP) 4000-Y0
Explosion protection:
II 2G Ex eb IIC Gb
II 2D Ex tb IIIC Db

CONNECTING PART SKX

PUSH BUTTON ACTUATOR 4000-S.,4000-K.
Explosion protection:
II 2G Ex eb IIC Gb
II 2D Ex tb IIIC Db

10. BUILD-IN COMPONENTS:

Description, type, display	Description, type, display

PUSHBUTTON PBT/ ., PTB/ . G

Explosion protection:
II 2G Ex db eb IIC Gb I M2 Ex db eb I Mb
Rated voltage: 690 V
Rated current: 16 A
Application category AC 15:
250 V/6 A 500 V/4 A
Application category DC 13:
24 V/6 A 60 V/0,8 A 110 V/0,5 A
Connection terminals: 2 x 1,0 - 2,5mm2

PTB/ . G – gold-plated contacts
For voltage up to 60 V and current from 1 mA to 200 mA

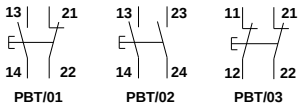

SIGNAL LAMP SLP

Explosion protection:
II 2G Ex db eb IIC Gb I M2 Ex db eb I Mb
Rated insulation voltage: 690 V
Rated voltage: 12 to 250 V AC/DC
Rated current: 12 to 2,5 mA
Connection terminals: 2 x 1,0 -2,5 mm2

CONTROL SWITCH SMS 03/.

Explosion protection:
II 2G Ex db eb IIC Gb
I Mb Ex db eb I Mb
Rated voltage: 690 V
Rated current: 16 A
Application category AC 23:
690 V/8 A
Application category AC 3:
380 V/10 A
Application category DC 21:
60 V/10 A 110 V/1,85 A 220 V/0,6 A
Connection terminals: 2 x 1,0 - 2,5mm2

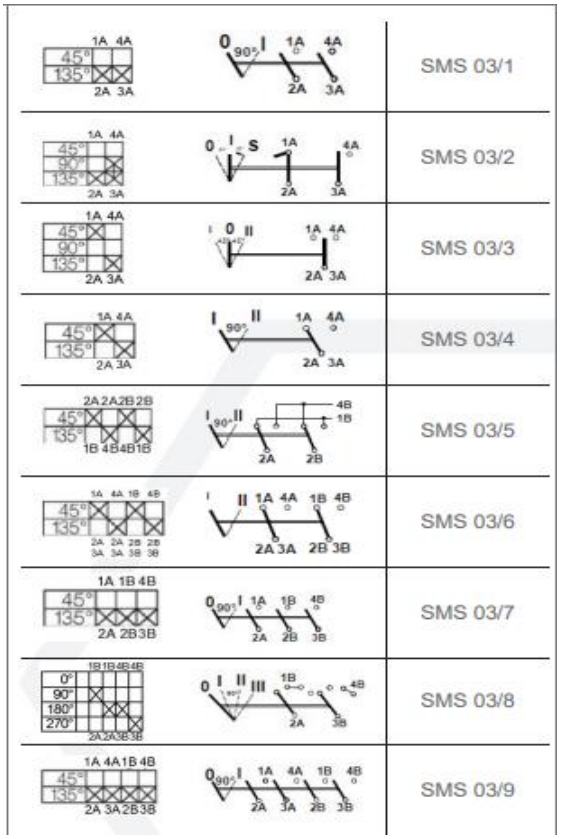

CONTROL SWITCH GHG 23. ...R....

Explosion protection:
I M2 Ex d e I Mb II 2G Ex d e IIB/IIC Gb
II 2G Ex d ia/ib IIB/IIC Gb
Rated voltage: 690 V
Rated current: 10 A
Application category AC 11:
230 V/10 A 500 V/6 A
Application category DC 11:
24 V/2 A 230 V/0,4 A
Connection terminals: 2 x 1,0 - 2,5mm^2

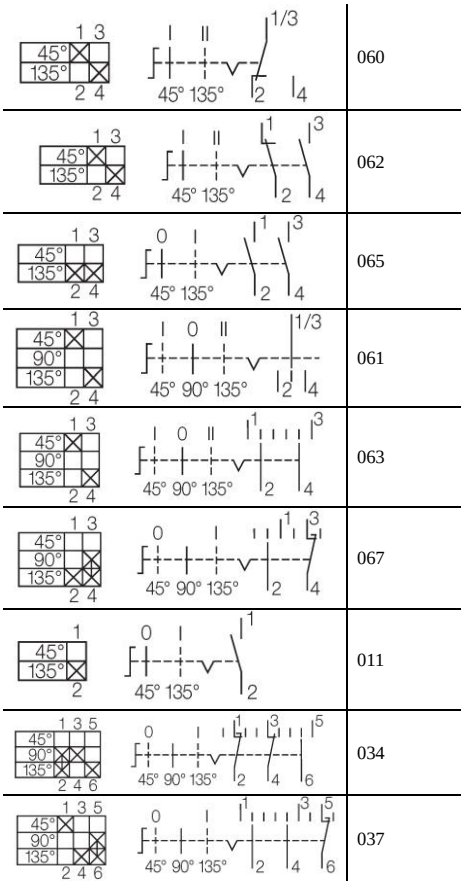

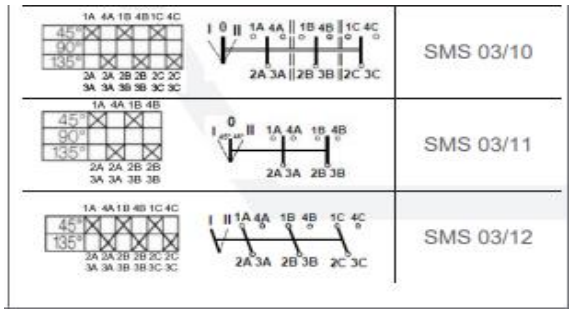

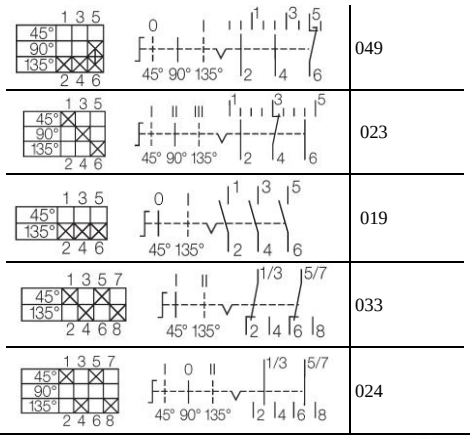

N/PE bus bar (only SKX 15)

Explosion protection:
II 2G Ex eb IIC Gb
II 2D Ex tb IIIC Db
I M2 Ex eb I Mb
Terminal: 11 x max. 2x4mm^2

PUSH BUTTON WITH TWO AXES - 0201

Explosion protection:
II 2G Ex db eb IIC Gb

MANTLE TERMINALS SL 8

Explosion protection:
II 2G Ex eb IIC Gb
Rated voltage: 400 V
Rated current: 10/16 A
Connection terminals:
3 x 4 mm^2, 2 x 4 mm^2 + 2 x 2,5 mm^2

MANTLE TERMINALS SL 5

Explosion protection:
II 2G Ex eb IIC Gb
Rated voltage: 400 V
Rated current: 10/16 A
Connection terminals:
3 x 4 mm^2, 2 x 4 mm^2 + 2 x 2,5 mm^2

POTENCIOMETAR
- GHG 410 1901 R....

Explosion protection:
II 2G Ex d e IIC/IIB Gb I Mb Ex d e I Mb
- 0203-A
Protueksplozijska zaštita:
II 2G Ex db eb IIC Gb
Rated voltage: from 250 V
Rated power: 1 W
Rev range: 270°
Scale: 0-100%
Connection terminals: 2 x 1,0 - 2,5 mm2

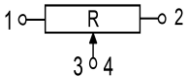

Resistance R:
1,0 kΩ
2,2 kΩ
4,7 kΩ
10 kΩ
470 kΩ

ASSEMBLY OF TERMINAL BLOCK ON THE APPARATUS CARRIER
2 x 16 mm^2 CTS16U
5 x 4 mm^2 CTS4UN
5 x 4 mm^2 CTS4UN RAL 5012

Screw connection terminals 2x16 mm2 or 5 x 4 mm2 on the apparatus carrier TH 35-7,5
Explosion protection: II 2G Ex eb IIC Gb
Rated voltage: 630 V
Rated current: 10/16 A

Screw connection terminals 5 x 4 mm2 RAL on the apparatus carrier TH 35-7,5
Explosion protection: II 2G Ex ib IIC G
Maximum safe voltage: 60 V

MEASURING INSTRUMENT GHG 41098 09 R.... (AM 72)
Explosion protection: II 2G Ex e IIC Gb II 2G Ex e mb IIC Gb
II 2G Ex ib IIC Gb

0205-.A, 0205-.mA
Explosion protection: II 2G Ex eb mb IIC Gb II 2G Ex eb IIC Gb
Instrument with moving-coil
Measuring range: 0 - 20 mA, 4 - 20 mA
Measuring accuracy: class 1,5
Overloading area: 1 : 1,2
Connection terminals: 2 x 1,5 - 4 mm^2
Parameters of Intrinsic Safety:
L_i = 0,1 mH max.
C_i = 0,1 nF max.
U_i = 30 V max.
U_i = 150 mA max.
U_m = 690 V_{rms}

MEASURING INSTRUMENT GHG 41098 08 R... (VM 72)
Explosion protection: II 2G Ex e IIC Gb II 2G Ex e mb IIC Gb
II 2G Ex ib IIC Gb

0205-.V
Explosion protection: II 2G Ex eb mb IIC Gb II 2G Ex eb IIC Gb
Instrument with moving iron
Measuring range : 6 - 660 V
Measuring accuracy: class 2,5
Overload range:1 : 1,5
Connection terminals: 2 x 1,5 - 4 mm2

11. INSPECTION, MAINTENANCE, REPAIR, OVERHAUL

Inspection and maintenance have to be performed in accordance with standard EN 60079-17, manufacturer's user manual, national regulations, and user policy.
Repair should be done by the manufacturer or a person legally authorized by the manufacturer, with original parts according to products documentation, in accordance with standard EN 60079-19.
In case of improper installation, failure of inspection and maintenance, unauthorized repair or any overhaul on the product, the manufacturer is free of all responsibility, and the Declaration of Conformity becomes invalid.

12. MOUNTING

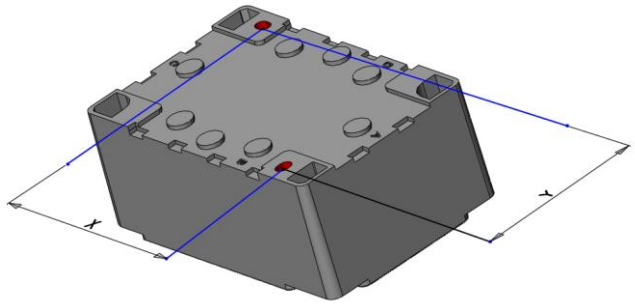

Housing	Dimensions	
	X[mm]	Y[mm]
SKX 12	75	50
SKX 13	100	75
SKX 14	152	75
SKX 15/15H	152	126

13. SPARE PARTS (according component specification)

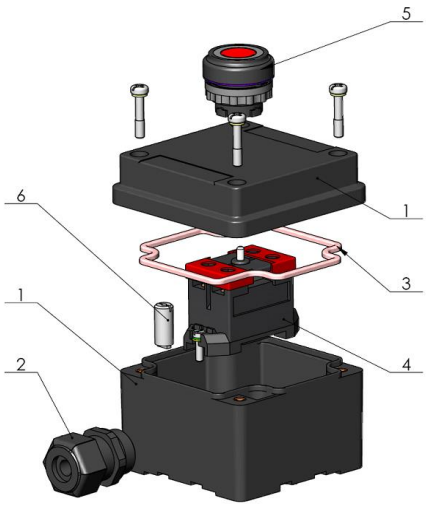

1. Enclosure and cover SKX 12-15 with cover screw and PE terminal body
2. Cable glands and plugs; according to specification
3. Cover gasket SKX . .
4. Build-in components; according to specification
5. Actuators and indicators; according to specification
6. Terminal PE

14. MOUNTING

Explosion protected control units type SKX 12 - SKX 15 are labelled with:

- External marking plate:

II 2GD

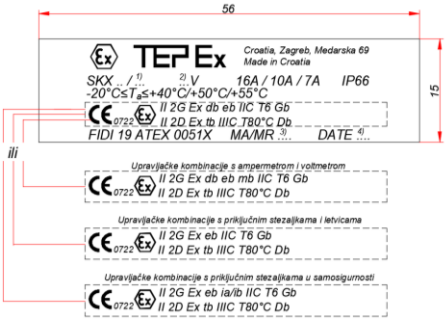

I M2

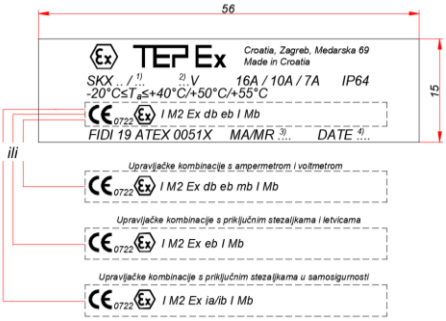

- Internal label:

II 2GD

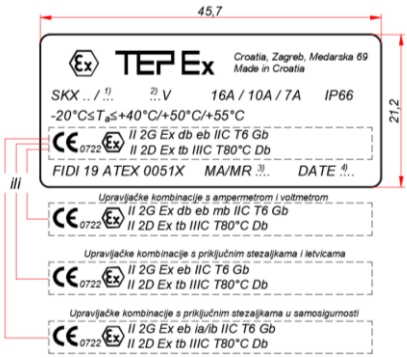

I M2

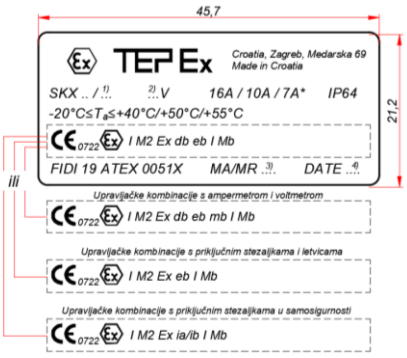

1) Model code
2) Rated voltage U_e - depends on the built-in components
5) Factory number
6) Date, month/year
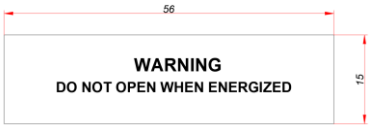
- Warning label: